GHHP-2019-045

2019 5

1 1
2 4
2.1 4
2.2 6
2.3 6
2.4 6
3 7
3.1 “ ” 7
3.1.1 7
3.1.2 “ ” 8
3.2 11
3.3 11
3.3.1 11
3.3.2 17
3.3.3 19
3.3.4 20
3.4 21
3.4.1 22
3.4.2 22
3.5 22
4 27
4.1 27
4.1.1 27
4.1.2 29
4.1.3 32
4.1.4 32
4.2 “ ” 33
4.2.1 “ ” 33
4.2.2 “ ” 33
5 37
5.1 37
5.1.1 37
5.1.2 37
5.2 38
5.2.1 38
5.3 39
5.3.1 3
9
5.3.2
..... 42
6 45
6.1 45
6.2 45
6.3 46

6.4 46
7 48
7.1 48
7.2 49
7.2.1 49
7.2.2 49
7.3 49
7.4 50
8 51
8.1 51
8.2 51
8.3 51
8.4 52
8.5 52
9 56
9.1 56
9.2 56
9.2.1 56
9.2.2 68
10 74
10.1 74
10.2 74
10.3 74
10.4 75
10.5 75
10.5.1 75
10.5.2 75
10.6 76
10.7 76
11 81
11.1 81
11.1.1 81
11.1.2 “ ” 81
11.1.3 81
11.1.4 82
11.1.5 82
11.1.6 83
11.2 85

	[2012] 3
	[2012]8
	[2014]2
	[2015]7
	[2016]17

1	
2	
3	

1	“ ”

1

( )

( ) (

) ( ) [(

)]

2002 6

“ PVC ”

2003 1

“ PVC ”

2005 8 31

2003 12

“ ”

2005 1 2005 8 31

2009 6

“ ”

[2009]100 2014 1

2014 1 29

[2014]005

57000 186671

2012 10 31

[2012] 3 2012 9

2012 10 26

[2012]8

E101 E201 E301

“ + +15

” “ + ” “ +

+MBR ” 2014 1

682

<

> ([2017]4

2019 2

2019 3 2

2019 3 21 22

2

2.1

1 1989 12 26 2014 4 24 2015 1 1

2 1984 5 11 1996 5 15 2008 2 28 2017 6 27 2018 1 1

3 1987 9 5 1995 8 29 2000 4 29 2015 8 29 2016 1 1 2018 10 26

4 1996 10 29 1997 2018 12 29

5 1995 10 30 2004 12 29 2013 6 29 2015 4 24

11 23

8 2018 5 16

2012 1 12 2018 3 28 2018

5 16

9 2009 9 23

2012 1 12

2017 6 3 2018 3 28

2018 5 16

10 1998 11 29

253 2017 7 16

682

2017 10 1

11 < >

[2017]4

12

[2017]1235

13

[2015]113

14 [2

018]34

15

[97]122

16

[2018] 6

17 [201

5]256

2.2

1

2012 9

2 <

> [201

2]8 2012 10 26

3

2015 5

4 <

> [20

15]7 2015 8 4

2.3

1 HJ792-201

6

2 < >

2018 9 2018 5 15

3 HJ/T 397-2007

4 HJ/T 91-2002

5 HJ 819-2017

2.4

1

2

2016 5

3

3

3.1 “ ”

3.1.1

1 PVC

2003 1

“ PVC ”

2005 8 31

2

2003 12 “

”

2005 1 2005 8 31

3

2009 6 “

” [2009]100

2014 1 2014 1 29

[2014]005

4

2017 10 “

”

[2017]99 2017 11

2018 12

3-1

3.1.2 “ ”

3-1

1	PVC	PVC 100 /a	2003 1 14	2002 6	2005 8 31	
2		5000 /a	2003 12 22	2004 1 2005 1	2005 8 31	
		2000 /a				
		50 /a				
		1000 /a				
		500 /a				
3		A 3000 /a	2009 6 4 [2009]100	2009 7 2014 1	2014 1 29 [2014]005	
		B, 2500 /a				
		C, 1500 /a				
		D, 1500 /a				
		A,400 /a				
		B,500 /a				
		C,500 /a				
		D,200 /a				
		A 100 /a				

		B, 100 /a				
4		4.8 /a	2017 10 27 [2017]99	2017 11 2019 4		
		3.2 /a				
		3.2 /a				
		2.0 /a				
		10.8 /a				
		6.0 /a				
		10.0 /a				

3.2

99

118°88'65" 32°14'05"

3

E101 E201

41450 215

0.50%

537 310 185

42 250 8 2000

3-2 3-3

3-4

3-2

	99

2012 10 31

/

	15 500 980 15kg 260kg
	E101 E 201 E301

3-3

				h	
		100 /a			
		100 /a			
		200 /a			
		100 /a			
		200 /a			
		30 /a			
		300 /a			
		300 /a		2000	
		50 /a			
		100 /a			
		5kg/a	E201		
		5kg/a	E101		
		5kg/a			
		10kg/a	E301		
		250kg/a			

						/
			+	+ +MBR	+ +MBR	
				“ ”	“ ”	
						/
			31047m^2			/

3.3.2

3-5

3-5

		/			
1		RET B S 25	1	1	/
2		EURO-ST D S25	1	1	/
3		T18BS25	1	1	/
4		YB-2	1	1	/
5		PL303	3	3	/
6		ZB-1E	1	1	/
7		FT-200AE	2	2	/
8		ZS-2E	1	1	/
9		HB43-S	1	1	/
10		/	1	1	/
11		YP10K-1	2	2	/
12		PL602-L	1	1	/
13		LGJ-50PLC	1	1	/
14		DP30A	1	1	/
15		DHG-9203A	1	1	/
16		HS-20D	1	1	/
17		UNILAB-05-TJ	1	1	/
18					

		/			
21		Agilent 1200	1	1	/
22		LC-20A	10	10	/
23		Agilent1260	20	5	/
24		XP205DR	2	2	/

2

/			
HWCL-5	1	1	/
DJ-1	4	4	/
SHB-	1	1	/
R201D	2	2	/
/	2	2	/
R201D	2	2	/
SHB-	1	1	/
ZKC-A	1	1	/

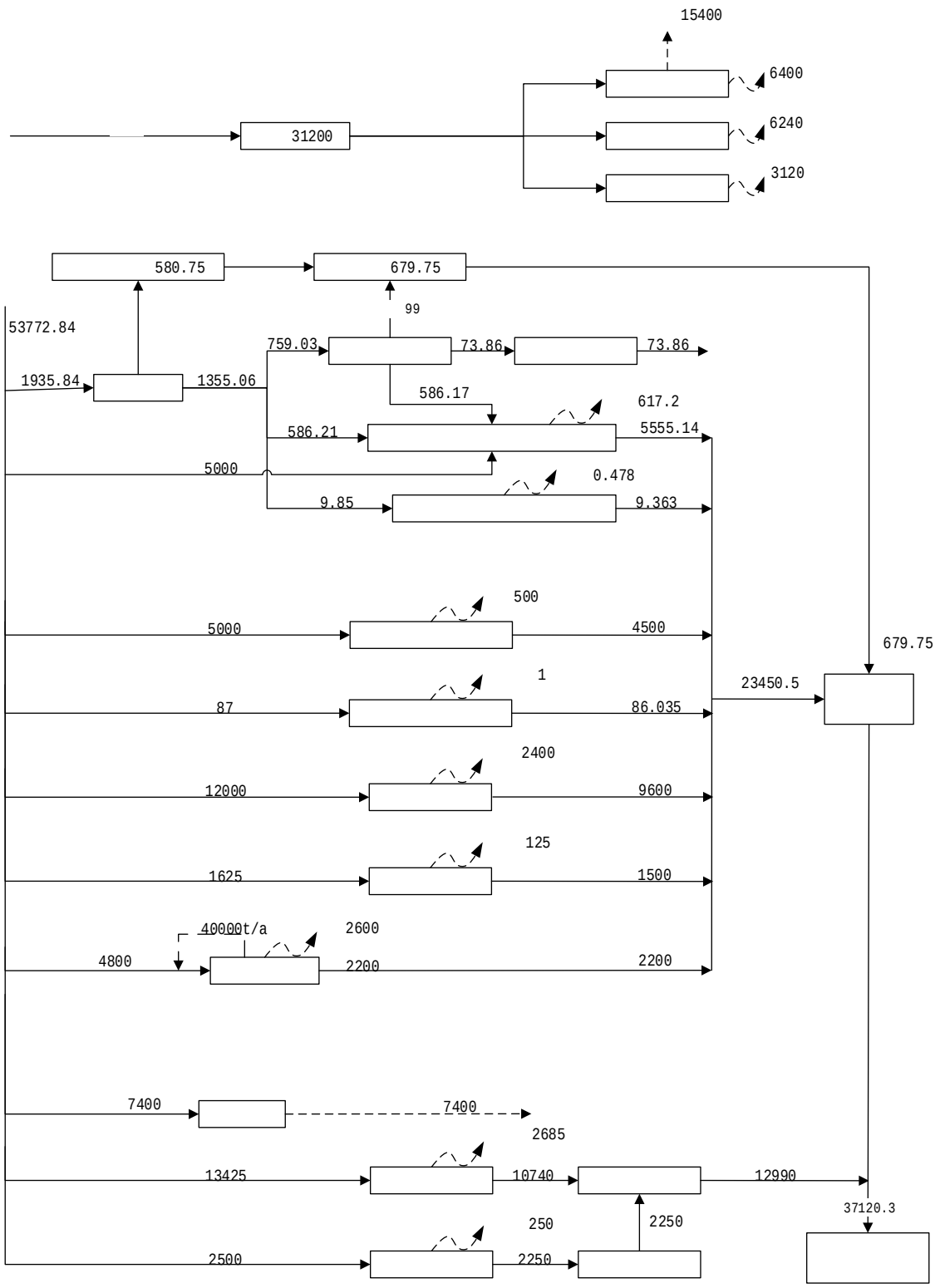

3-1 t/a

3.4

E101 E201 E301

3

100t/d 150t/d

MBR 6 MBR

100t/d 150t/d

37120.3t/a

3-7

3-7

		1200			
1					
			k	╔	ʒ

[2018]6 2.

[2015]256

3-8

3-9

3-8

	[2018]6		
	50%	k	
1			

4-1

					t/a				
			COD SS		10054.8				
					95.398				
					9600				
			pH COD SS		**500**				
			COD SS		679.75				
			COD SS		**10740**				
			COD SS		**2250**				

4.1.2

3 1 30

1

4-2

4-2

4-2

					/		/		
							90%	30 10cm	
							60%		

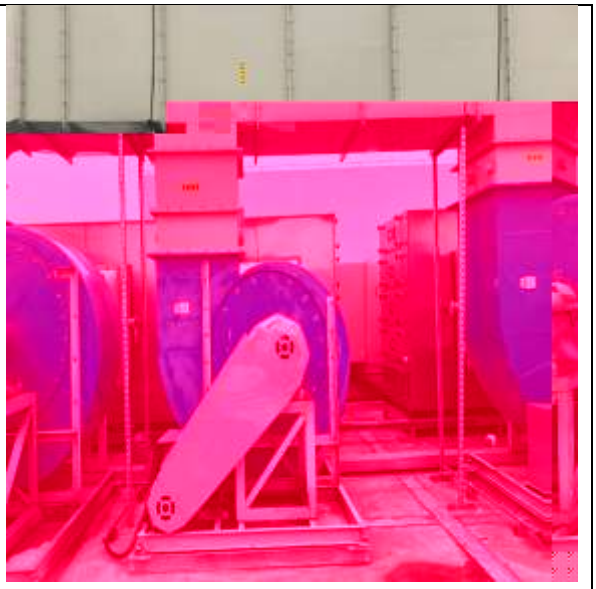

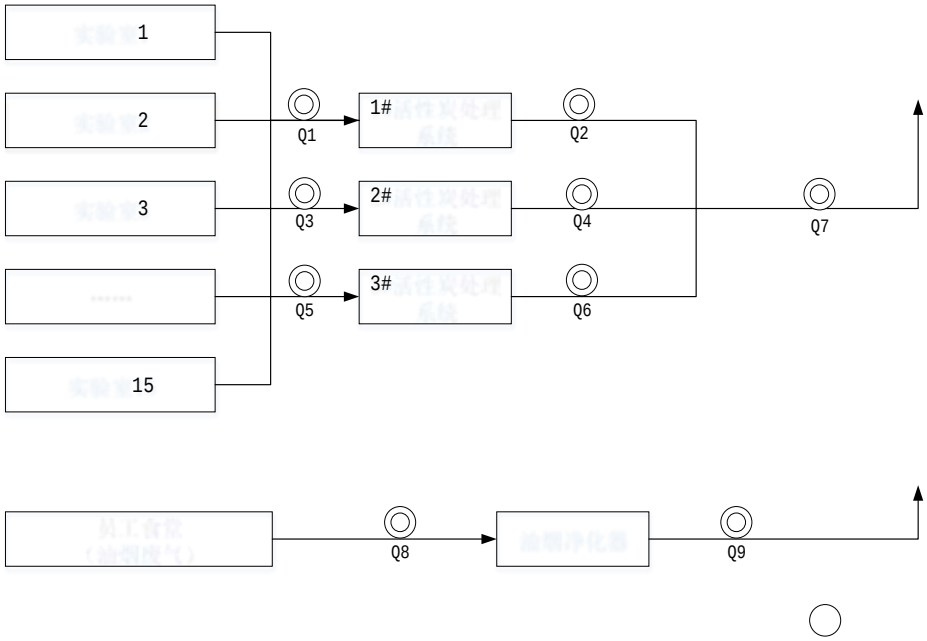

4-2

4.1.3

DaR9ÂNDaR9ÂNÃaSÊE#D.'ÃS(E#DÂN(E#DÂNÃ69ÃZE#DÂNÃASER9E6ÂNER9E6ÂNÃ0ÃÊU#tSl'ÃÊU#tS

4-4

4-4

						t/a		
			/	HW49 900-047-				

				+MBR	+ +MBR	580	
					+ +	155	
						205	
						5	
						0	
						5	
						5	

5

5.1

5.1.1

5.1.2

1

2

3

4

“ + +15

”

280

5.7

6

500 980 15kg

260kg

1 “ ”

GB18597-2001)

5

2

6

100m

7

≤24733t/a, COD≤7.35t/a SS≤6.15t/a ≤0.36t/a ≤0.06t/a, COD≤2,47t/a SS≤1,73t/a ≤0.36t/a ≤0.01t/a, ≤0.006t/a ≤0.006t/a ≤0.08kg/a HCl≤0.03kg/a ≤0.025kg/a

" "

5

5.3.2

2012 8)

1 186671m

60000m)

(GB18597-2001)

5

50

6 ([97]122

7 ≤24739

COD≤7.35 NH_3-N≤0.36 COD

≤2.47 NH_3-N≤0.36

" "

3

5

“ 2012 8 ”

6

6.1

6-1

6-1

	mg/L,pH	
pH	6-9	
	500	
	400	
	35	
	3.0	

6.2

3

1 30 2

0 200

5

6-2

		(kg/h)			
	(mg/m^3)	H_1=30m	H_2=30m	(mg/m^3)	
	190	29	14.5	12	GB16297-1996 2
	100	1.4	0.7	0.20	
	261	0.3	/	/	

GB16297-1996 200m

5m 50%

H_1=30m H_2=30m 50%

6-3

	mg/m^3	%			
	2.0	60	75	85	GB18483-2001

6.3

GB1234

8-2008 3

6-4

6-4

	Leq dB A	
	65	GB12348-2008
	55	3

6.4

[2012]8

[2015]7

6-5

6-5

		24739 t	24739 t
	COD	7.35 t/a	2.47 t/a
	SS	6.15 t/a	1.73 t/a
		0.36 t/a	0.36 t/a
		0.06 t/a	0.01 t/a
		0.006 t/a	0.006 t/a
		0.006 t/a	0.006 t/a
		0.08 kg/a	0.08 kg/a
		0.03 kg/a	0.03 kg/a

0.025 kg/a

7

E101 E201 E301

7.1

7-1 2

4-1

7-1

		/	/			
	S1		+ +MBR	pH COD SS NH_3-N TP	4 / 2	

7.2

7.2.1

VOCs

7-2 2

4-2

7-2

		/			

7-3

/

.

8.8. 8.

0.5dB 0.5dB

8. 2B8274(0)95ETQq0.000071 0 595.32 841.92 reW*nBT/F

0¥S(A6E"D

8-1

					/
	pH	pH	GB/T6920-1986	/	pH PHB-1 JSGHEL-YQ-112-2
	COD_{Cr}		HJ 828-2017	4 mg/L	50mL JSGHEL-YQ-115-2
	SS		GB/T11901——1989	0.4 mg/L	BSA224S JSGHEL-YQ-102
			HJ 535-2009	0.025 mg/L	UV201 JSGHEL-YQ-38
			GB 11893-1989	0.01 mg/L	UV201 JSGHEL-YQ-38
			HJ 637-2018	0.06 mg/L	JLBG-125 JSGHEL-YQ-35
			HJ/T 33-1999	2 mg/m^3	

8-2

				%		%

8-4

9

JSGHEL20192 01 JSGHEL2019201

9.1

2019 3 21 2019 3 22

“ ”

9.2

9.2.1

9.2.1.1

2019 3 21 2019 3 22

S1 S2 S3

S1 pH7.3 2 7.41 COD_{Cr}167mg/L 5.61mg/L 0.54mg/L 35mg/L

9-1

9-1

			(mg/L)		
		pH	7.32		

2019 3 21 S1

			(mg/L)		
			0.54	3.0	
			35	400	
			2.10	/	/
	S2	pH	7.51	/	/
		COD_{Cr}	12	/	/
			9	/	/
	S3	pH	7.60	/	/
		COD_{Cr}	16	/	/
			6	/	/
	S4	pH	7.63 7.67	/	/
		COD_{Cr}	4.148×10^{3}	/	/
			0.563	/	/
			0.06	/	/
			84	/	/
	S5	pH	7.44 7.46	/	
		COD_{Cr}	42	/	/
			0.111	/	/
			0.02	/	/
			6	/	/
2019 3 22	S1	pH	7.35 7.43	6 9	
		COD_{Cr}	167	500	
			4.40	35	
			0.47	3.0	
			35	400	
			45.9	/	/
	S2	pH	7.47	/	/
		COD_{Cr}	14	/	/
			8	/	/

			(mg/L)		
	S4	pH	7.56 7.61	/	/
		COD_{Cr}	2.837×10^3	/	/
			1.36	/	/
			0.10	/	/
			75	/	/
	S5	pH	7.42 7.45	/	/
		COD_{Cr}	40	/	/
			0.074	/	/
			0.02	/	/
			8	/	

2019 3 22 S3

9.2.1.2

2019 3 21 2019 3 22

GB16297-1996 2

GB18483-2001

9-2 9

-3

9-2

1# Q1	2019 3 21	mg/m^3	ND	ND	ND	ND	/	/
		kg/h	<5.72×10^{-4}	<5.95×10^{-4}	<5.60×10^{-4}	<5.95×10^{-4}	/	/
		(mg/m^3)	ND	ND	ND	ND	/	/
		(kg/h)	<3.81×10^{-2}	<3.97×10^{-2}	<3.73×10^{-2}	<3.97×10^{-2}	/	/
		(mg/m^3)	0.13	0.10	0.05	0.13	/	/
		(kg/h)	2.42×10^{-3}	1.92×10^{-3}	9.95×10^{-4}	2.42×10^{-3}	/	/
		# (mg/m^3)	16.2	24.1	10.1	24.1	/	/
		# (kg/h)	0.309	0.479	0.188	0.479	/	/
	2019 3 22	mg/m^3	ND	ND	ND	ND	/	/
		kg/h	<5.41×10^{-4}	<5.52×10^{-4}				

2#	3 21	kg/h	<4.24×10^{-4}	<4.18×10^{-4}	<4.40×10^{-4}	<4.40×10^{-4}	/	/
Q3		(mg/m^3)	ND	ND	ND	ND	/	/
		(kg/h)	<2.83×10^{-2}	<2.79×10^{-2}	<2.94×10^{-2}	<2.94×10^{-2}	/	/
		(mg/m^3)	0.05	0.01	ND	0.05	/	/
		(kg/h)	<7.06×10^{-4}	<2.32×10^{-4}	<1.47×10^{-4}	<7.06×10^{-4}	/	/
		# (mg/m^3)	0.443	0.509	0.440	0.509	/	/
		# (kg/h)	6.27×10^{-3}	7.10×10^{-3}	6.46×10^{-3}	7.10×10^{-3}	/	/
	2019 3 22	mg/m^3	ND	ND	ND	ND	/	/
		kg/h	<4.12×10^{-4}	<4.32×10^{-4}	<4.14×10^{-4}	<4.32×10^{-4}	/	/
		(mg/m^3)	ND	ND	ND	ND	/	/
		(kg/h)	<2.75×10^{-2}	<2.88×10^{-2}	<2.76×10^{-2}	<2.88×10^{-2}	/	/
		(mg/m^3)	0.08	0.10	0.10	0.10	/	/

9.2.1.3

2019 3 21 2019 3 22

59.3dB(A)

GB12348-2008 3

9-4 9-5

9-4

				dB(A)	dB(A)		
2019 3 21	Z1	1		55.5	65		
	Z2	1		59.3	65		
	Z3	1		52.3	65		
	Z4	1		52.3	65		
	Z5	1		52.0	65		
	Z6	1		55.8	65		
2019 3 22	Z1	1		59.1	65		
	Z2	1		56.4	65		
	Z3	1		51.9	65		
	Z4	1		51.9	65		
	Z5	1		51.0	65		
	Z6	1		53.2	65		

9-5

			%	kPa	m/s	
2019 3 21		/	/	/	2.4	
2019 3 22		/	/	/	2.1	

9.2.1.4

1

37120.3t/a COD 6.

20 t/a 1.30t/a 0.21t/a 0.02t/a

9-6

9-6

	mg/L	t/a	t/a
	/	37120.3	24733
COD_{Cr}	167	6.20	7.35
SS	35	1.30	6.15
	5.61	0.21	0.36

1# VOCs

61.3%-95.2% 2# VOCs 17.0%-71.

1% 3# VOCs 40.4%-80.7%

5.56%-55.5%

9-7

9-8

9-7

kg/h

		2019 3 21	2019 3 22

2019 3 21 2019 3 22

9.2.2.2

2019 3 21 2019 3 22

，

98.6%-99.0% 89.3%-92.9%

80.3%-94.65 66.7%-80%

9-9

9-9

mg/L

2019 3 21	S4	4.148×10^{3}	84	0.563	0.06
	S5	42	6	0.111	0.02
%		99.0	92.9	80.3	66.7
2019 3 22	S4	2.837×10^{3}	75	1.36	0.10
	S5	40	8	0.074	0.02
%		98.6	89.3	94.6	80

10

10.1

“ ”

10-1

10.4

10.5

10.5.1

10.5.1.1

115m 115m

10.5.1.2

10.5.2

10.5.2.1

2019 1 14

3 1

+ +

u

2

GB16297-1996) 2

	GB18597-2001)	
5	2	5 1 1 3 2 1
6	(GB12532-90) 15	
7	DB32139-96)	
8	≤24733t/a, COD≤7.35t/a SS≤6.15t/a ≤0.36t/a ≤0.06t/a, COD≤2,47t/a SS≤1,73t/a ≤0.36t/a ≤0.01t/a, ≤0.006t/a ≤0.006t/a ≤0.08kg/a HCl≤0.03kg/a ≤0.025kg/a	37120.3 COD 6.20 NH_3-N 0.21 1.3 0.02 0.020kg/a

10-3 “ ”

		⌋

186671m

1 60000m) E101 E201 E301

E101 E201 E301 ъ I

D201

155597m^2,

	12.2 m^2) 31074m^2, 7.4 m^2)	E301 2016 6 20

“ + ”

“ +

2 “ + +MBR ”

8	(GB18597-2001)	(GB18597-2001)
9	50	50
10	([97]122	([97]122
11	≤ 24739 COD≤7.35 NH_3-N≤0.36 COD≤2.47 NH3-N≤0.36	37120.3 COD 6.20 NH_3-N 0.21 1.3 0.02

11

11.1

11.1.1

99 186671

90300 935

500

980 15kg 260kg

11.1.2 “ ”

2012 9 2012 10 26

Aô

2015 5

2015 8 4

N©¾ 2013 2015 12

Ḥ

4

11.1.6

1

S1 pH7.32 7.41 COD_{Cr}167mg/L 5.61mg/L 0.54mg/L 35mg/L

2

GB16297-1996

2

GB18483-2001

3

59.3dB(A)

1

37120.3t/a COD 6.

20 t/a 1.3t/a 0.21t/a 0.02t/a

“ ”

( ) ( ) ( )

				/		99
	( )	C2720			/	118 ° 88'65" 32 ° 14'05"

500